Supply this manual to the user.

INSTRUCTION MANUAL

HOSE REEL

HR-2000 SERIES
HR-3000 SERIES

⚠ WARNING

- **Read this manual before use.**
- **Keep this manual available.**

ENDO KOGYO CO., LTD

ENDO

RM-10661a
Issued on Mar. 2020

Copyright and liabilities

November 2019 ENDO KOGYO CO., LTD.

SAFETY ALERT SYMBOL AND ALERT SIGNS

Please read this manual carefully and follow its instructions.

The SAFETY ALERT SYMBOL ⚠), WARNING, CAUTION, and NOTE carry special messages.

⚠ **This SAFETY ALERT SYMBOL is used to call your attention to items or operations that could be dangerous to you or other persons using this equipment.**

Please read these messages and follow these instructions carefully.

⚠ **WARNING** : **WARNING indicates a hazardous situation which, if not avoided, could result in death or serious injury.**

⚠ **CAUTION** : **CAUTION indicates a hazardous situation which, if not avoided, could result in minor or moderate injury, damage or destruction of the equipment and others.**

NOTE : NOTE indicates a special instruction in operation or maintenance.

Scope of warranty and liabilities for the equipment

1. We will repair or replace the product free of charge if a failure due to manufacturing defects occurs under proper usage during the warranty period.
   For details, contact us or your dealer.

2. The warranty will be void in the following cases:
   1) Change in ownership.
   2) Repair, adjustment, or modification performed by a party other than the manufacturer, agents, or dealers.

3. The warranty period is one (1) year from the date of purchase except for consumables.

4. Repairs applicable to any of the following shall be charged even during the warranty period:
   1) Failure/damage caused by incorrect use.
   2) Failure/damage caused by use of non-genuine parts.
   3) Failure/damage caused by fire, earthquake, natural disaster, or other unexpected incident.
   4) Incident caused by fall, shock, negligence, or by inadequate storage.
   5) Failure/damage caused by use of parts or other equipment that are not included in this product.
   6) Replacement of consumables.
   7) Usage in violation of dangers or cautions stipulated in this Instruction Manual or the warning labels.
   8) Failure/damage caused by any reason that is not attributable to the manufacturer.

5. Warranty exclusions such as mechanical loss.
   Either during or after the warranty period, mechanical loss, damage to anything other than our product(s), or other duties incurred on you/your customer as a result of the failure of our product(s) are outside the scope of the warranty.

Contents

1. ⚠ **Safety instruction** ····· 1

2. Terminology definitions ····· 4

3. Product description ····· 5
   3-1. Models and specifications
   3-2. Names of main parts

4. Installation ····· 8
   4-1. Checks before installation
   4-2. Installation

5. Hose connection ····· 9
   5-1. Calculation of required hose length on winding side
   5-2. Hose connection

6. Spring tension adjustment ····· 11
   6-1. Relationship between winding torque and drum turns
   6-2. Standard value of initial spring turns and calculation for upper limit of initial spring turns
   6-3. Initial tension setting

7. Measures against uneven winding ····· 13
   7-1. Checks before adjustments
   7-2. Adjustments

8. Safety instructions on use ····· 14

9. Special accessories ····· 14

10. Periodic inspections ····· 16
   10-1. Visual inspections
   10-2. Leakage inspection
   10-3. Storage

11. Troubleshooting ····· 17

12. O-ring replacement ····· 17

13. Spring replacement ····· 19
   13-1. Disassembly of bracket
   13-2. Disassembly and reassembly according to spring structure
   13-3. Common reassembly method
   13-4. Spring disposal1

14. Parts list ····· 28

1. ⚠ Safety instructions

Regarding name plates, warning labels and labels:

⚠ WARNING

- **Never remove or deface any name plates, warning labels or labels which are attached to the body.**
  The operator should always observe them.

Regarding installation (page 8):

⚠ WARNING

- **Take sufficient care not to knock or drop the reel when handling.**
  Never use the arm of the guide roller (special accessories) to lift the reel.

Regarding hose connection (page 9):

⚠ WARNING

- **Fluid leakage hazard.**
  Stop supplying the fluid to the hose reel before the work.

⚠ CAUTION

- **Do not install hose to drum over winding length plus dead turn (2-3 turns).**
  Make free space in drum, otherwise hose could spill out from drum cover.
  If hose spilled, it causes accidents as a hose cutting.
- **Connect hose securely to prevent the fluid leakage from connected part.**

Regarding initial tension setting (page 12):

⚠ WARNING

- **Never let go of the drum during any work.**
  When released, the drum suddenly rotates, possibly causing personal injury.
- **After setting the initial tension, hose connection requires more than 2 people to secure the drum and connect the hose.**

Safety instructions on use (page 14):

⚠ WARNING

- **Never approach the moving parts during operation.**
  There is a danger of being caught up.
- **Before supplying defferent fluid into the hose, take maker's advise.**
  If there is no specification request on the type of fluid application, the product will be for air, water (less than 80℃), lubricating oil (mineral type), grease (lithium type).
  If you are applying different kinds of fluid from standard fluid type, teke maker's advise.
- **Shut off the fluid supply immediately in case of any trouble to avoid the problem escalating.**
- **Never use the reel when damaged or abnormal sound/vibration occurs.**
- **Never alter the reel or its accessories.**
- **Never let go of or unfasten the hose from the fixed points when the hose is pulled out.**
  The hose will rewind suddenly, possibly causing personal injury.

⚠ CAUTION

- **Use within the rated values of maximum working pressure (1.5 MPa {15kgf/cm^2}).**
- **Never pull out the hose past the winding length.**
  Always leave 2 - 3 dead turns on the drum. (To the sign of red tape)
  Put sign (red tape) on the 2 - 3 dead turns when installing or replacing the hose.

Regarding periodic inspections (page 16):

⚠ WARNING

- **Periodically inspect the reel and replace any worn or damaged parts.**
  Carefully check the hose has no damage.
- **If a malfunction is found during a periodic inspection, never reuse the reel but repair immediately.**
- **Allow the hose to fully wind onto the drum to give the minimum winding tension before carrying out inspections.**
- **Fluid leakage hazard.**
  Stop supplying the fluid to the hose reel before carrying out any work.

⚠ CAUTION

- **Always put up instruction signs ("Equipment being inspected", "Do not open the valve", etc.) before carrying out periodic inspections or repair.**
- **Always use genuine parts for replacement.**
- **Test the fluid leakage on the hose and reel after the reel has been stored for a long time.**

Regarding with O-ring replacement (page 17):

⚠ WARNING

- **High pressured fluid on hose reel is very dangerous.**
  Shut off the fluid supply and set 0 pressure in the hose.
- **Allow the hose to fully wind onto the drum to give the minimum winding tension before carrying out replacement.**

⚠ CAUTION

- **Always put up instruction signs ("Equipment being inspected", "Do not open the valve", etc.) before carrying out O-ring replecement.**
- **After finishing O-ring replacement, carry out the fluid leakage test on joint and each connection part.**

Regarding spring replacement (page 19):

⚠ WARNING

- **High pressured fluid on hose reel is very dangerous.**
  Shut off the fluid supply, and set 0 pressure in the hose.
- **If the winding side hose is disconnected from mating equipment, the drum may suddenly rotate.**
  Allow the hose to fully wind onto the drum to give the minimum winding tension, and work with more than 2 people divided into the person who secure the drum and the person who disconnect the hose.
  Allow the disconnected hose to wind around the drum, and slowly turn the drum until the winding tension in the drum is released.
- **Never disassemble the reel until winding tension is released.**
  The spring will burst out and cause personal injury.
  Even if the spring seems to be broken, never disassemble before ensuring no winding tension remains by rotating the drum by hand.
- **Never disassemble the reel using any other disassembly procedure.**
  If disassembled incorrectly, the spring will burst out and cause personal injury.
- **Never remove the spring from the spring case.**
  If removed, the spring will expand explosively and cause personal injury.
- **Follow the instructions for handling and disposing of the spring.**

⚠ CAUTION

- **Always put up instruction signs ("Equipment being inspected", "Do not open the valve", etc.) before carrying out spring replecement.**

2. Terminology Definitions

The terminology used in this manual will be explained here.
If there is any terminology which is unclear or not included in this section, please contact our company.

Winding methods: Figure 1

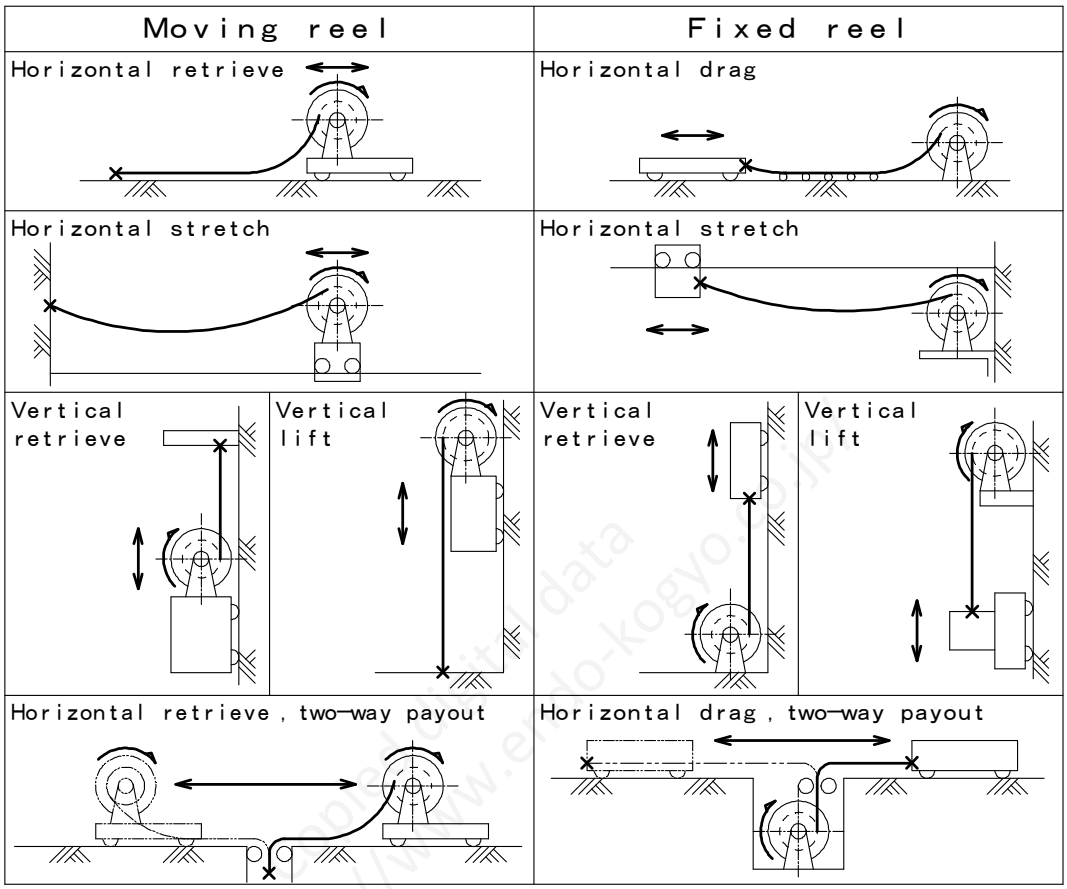

YRM000272a

Forward winding: The winding direction when viewed from the bracket side is right (clockwise).

Reverse winding: The winding direction when viewed from the bracket side is left (counterclockwise).

Figure 2

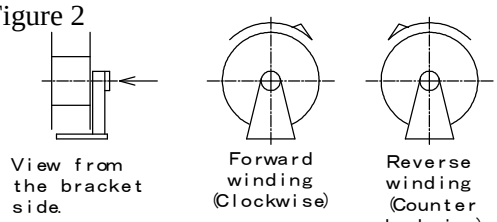

YRM000273

Forward seating: The installation plate (base plate) is cated under the drum.

Reverse seating: The installation plate (base plate) is located on the opposite side of the drum.

Figure 3

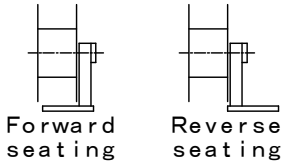

YRM000274

Dead turn: The 2-3 turns of hose wrapped around the drum other than the used winding length.

Initial spring turn: The applied initial tension to the spring.
The initial tension is required for winding the hose on the drum.

3. Product Description

3-1. Models and specifications

(1) Models

Please observe the name plate attached to the main body.
Refer to Figure 5 (page 7) for the attached location.

Figure 4

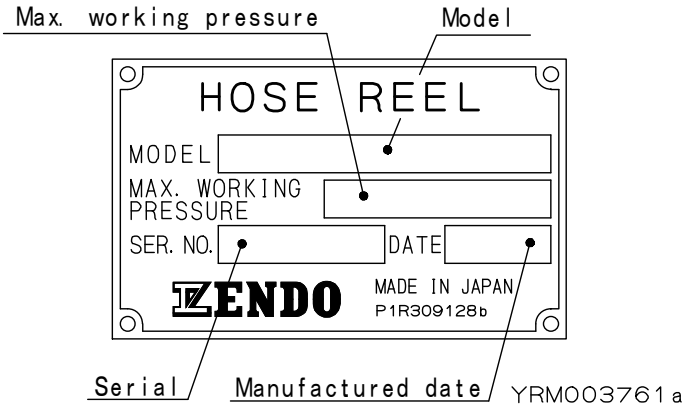

MODEL: The product model is shown.
Please check if this manual matches with the product.

MAX. WORKING PRESSURE:
Maximum working pressure is shown.

■Model description

HR	-	2A	2	05	W	-	1	R
Series name		Drum size and width	Drum cover size	Spring type	Spring combination		Installation plate	Winding direction

Drum size and width (mm)

Code	2	2A	3	3A
Size	200	200	230	230
Width	75	110	75	110

Drum cover size (mm)

Code	2	3	4	5
Size	292	350	440	510

Spring type

Spring code	05	10	09	16
Number of springs	05×1	05×2	09×1	16×1
Total spring torque N・m {kgf・m}	4.9 {0.5}	9.8 {1.0}	8.8 {0.9}	15.6 {1.6}

Spring combination

Code	None	W
number of sets	1	2

Installation plate

None	1
Forward seating	Reverse seating

Winding direction

None	R
Forward winding	Reverse winding

(2) Specifications

Table 1

Model	Maximum spring torque N・m {kgf・m}	Calculated maximum spring tension N{kgf}	Conection size {Rc}	Total number of spring turns	※ Spring structure	Reference Mass {kg}
HR-2205 HR-2250-R	4.9 {0.5}	49 {5.0}	Rc 3/8	20	A	8
HR-2305 HR-2305-R	4.9 {0.5}	49 {5.0}	Rc 3/8	20	A	9
HR-2A305W HR-2A305W-R	4.9 {0.5}	49 {5.0}	Rc 3/8	39	C	11
HR-3416 HR-3416-R	15.6 {1.6}	132 {13.5}	Rc 1/2	13	A	12
HR-3A409W HR-3A409W-R	8.8 {0.9}	73 {7.5}	Rc 1/2	38	C	16
HR-3A416W HR-3A416W-R	15.6 {1.6}	132 {13.5}	Rc 1/2	26	C	16
HR-3A516W HR-3A516W-R	15.6 {1.6}	132 {13.5}	Rc 1/2	26	C	20

NOTICE: The reference mass shown in the table does not include accessories such as guide rollers, turn table and ratchet mechanism.

※ The method for spring replacement is different depending on the spring structure. Refer to Chapter 13. "Spring Replacement" (page 19).

■Available fluid

Fluid: Air, Water (less than 80ºC), Lubricating oil (Mineral type), Grease (Lithium type)

Maximum working pressure: 1.5MPa {15kgf/cm^2}

■Application

Application area : general outside conditions

Ambient temperature: -10ºC to +50ºC

3-2. Names of main parts

Figure 5

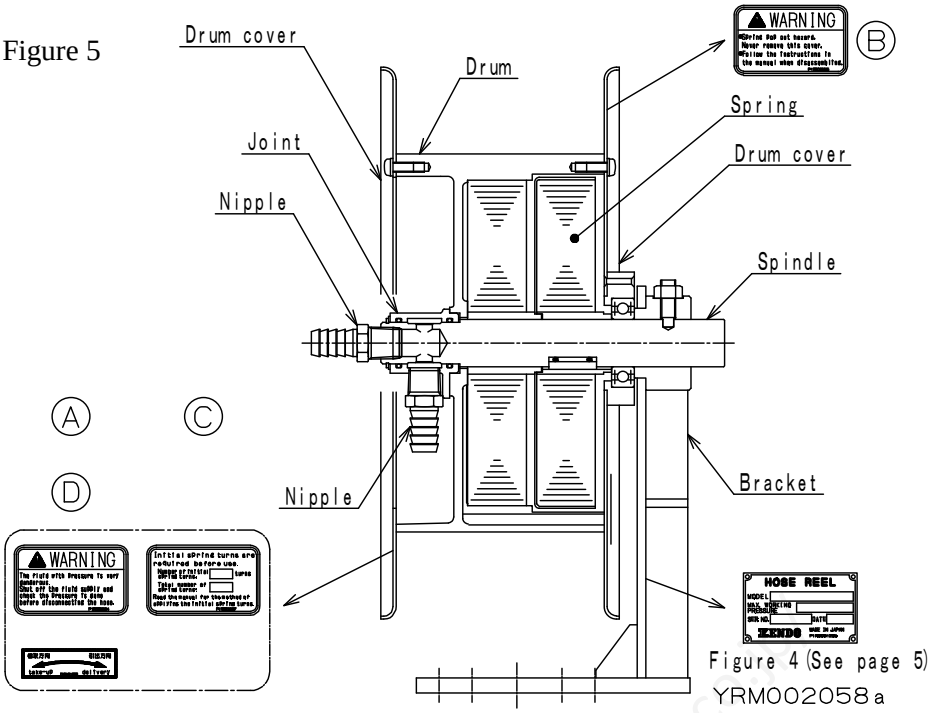

Regarding the accessories, refer to Chapter 9. "Accessories" (page 14).

(A) Warning label	(B) Warning label
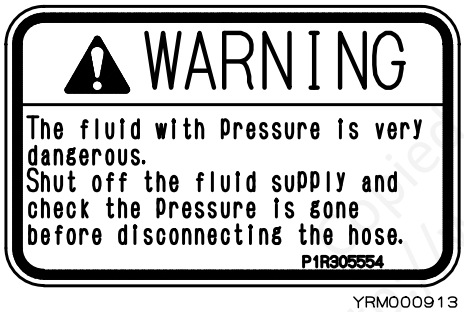 A warning is displayed regarding fluid pressure hazards.	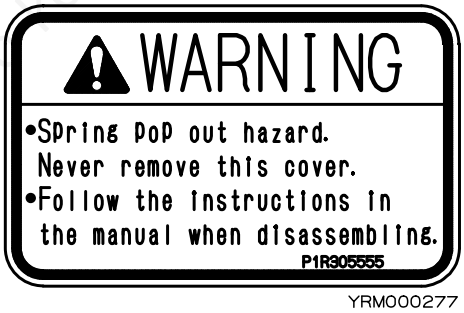 A warning is displayed regarding spring ejection hazards.
(C) Label	(D) Label
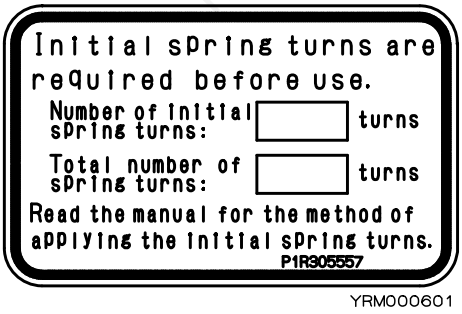 The required number of initial spring turns is displayed.	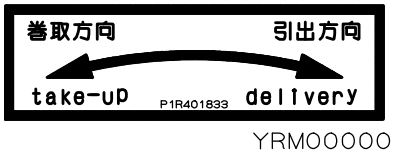 The winding direction is displayed.

4. Installation

4-1. Checks before installation

- Please check whether the items ordered were received.
  (Check the name plate.)
- Check there is no damage to the product caused during transportation.

4-2. Installation

⚠ WARNING

- **Take sufficient care not to knock or drop the reel when handling.**
  When lifting the reel, wrap the belt sling around the drum at least twice, and lift in stable conditions.
- **Never use the arm of the guide roller (special accessories) to lift the reel.**
- **For side attachment or inverse attachment, use bolts with a strength classification above 10.9.**

Figure 6

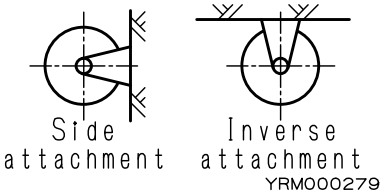

- Place the main body in the fixing location and anchor the bracket securely with 4 bolts.

NOTE: In order to correctly wind the hose adjust the reel position as shown in Figure 7.
Try to adjust so the center of the drum width lines up with the hose's fixed point on the mating equipment.
The surface the hose lies on should be horizontal.

Figure 7

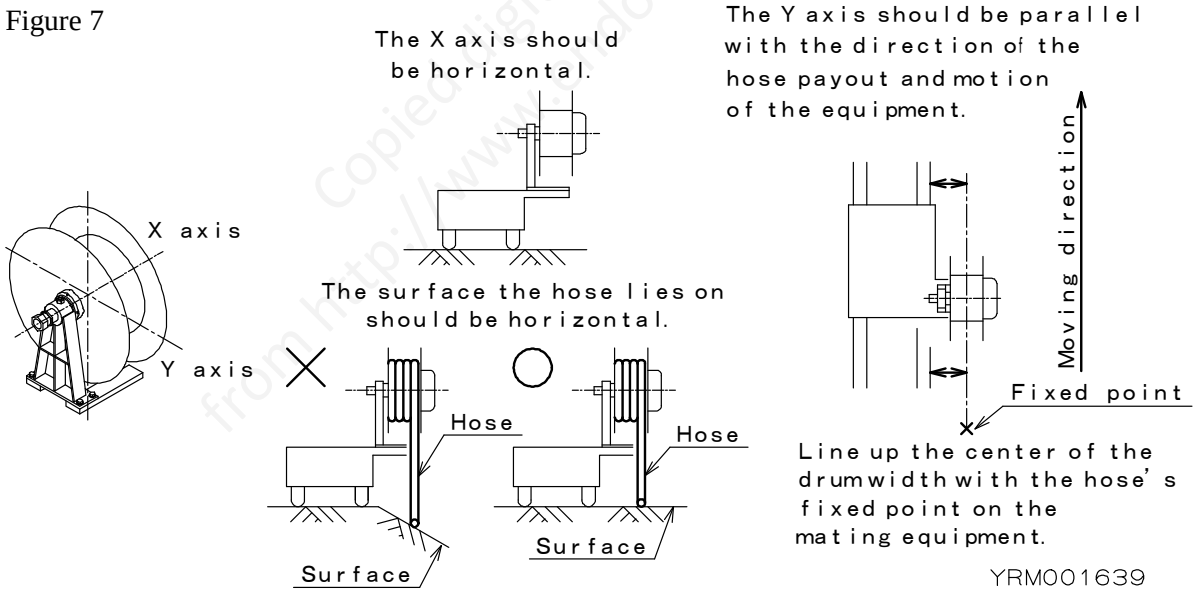

5. Hose Connection

5-1. Calculation of required hose length on winding side

Figure 8

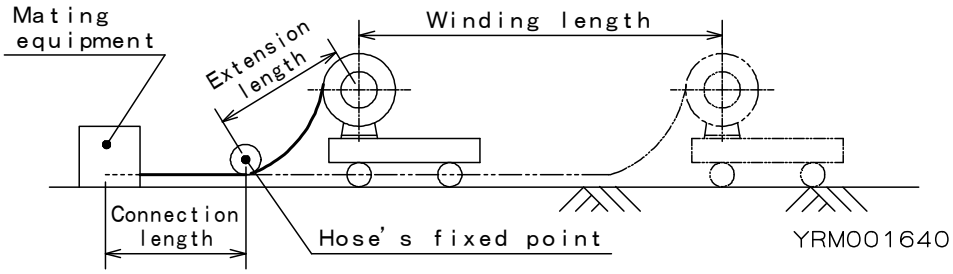

Hose length on winding side = Winding length + Extension length + Connection length
+ Dead turn length + Connection length inside reel.

Winding length = The length wound onto the drum.

Extension length = The length from the hose's fixed point to the end of the winding, which is not wound onto the drum.

Connection length = The length required to connect the mating equipment to the hose's fixed point.

Dead turn length = The length of the 2-3 dead turns.

Required dead turn length = (Drum diameter + Hose diameter) × π × 2 ~ 3

Number of dead turns

The length of 1 drum turn

5-2. Hose connection

⚠ WARNING

- **Fluid leakage hazard.**
  Stop supplying the fluid to the hose reel before the work.

⚠ CAUTION

- **Do not install hose to drum over winding length plus dead turn (2-3 turns).**
  Make free space in drum, otherwise hose could spill out from drum cover.
  If hose spilled, it causes accidents as a hose cutting.
- **Connect hose securely to prevent the fluid leakage from connected part.**

Figure 9

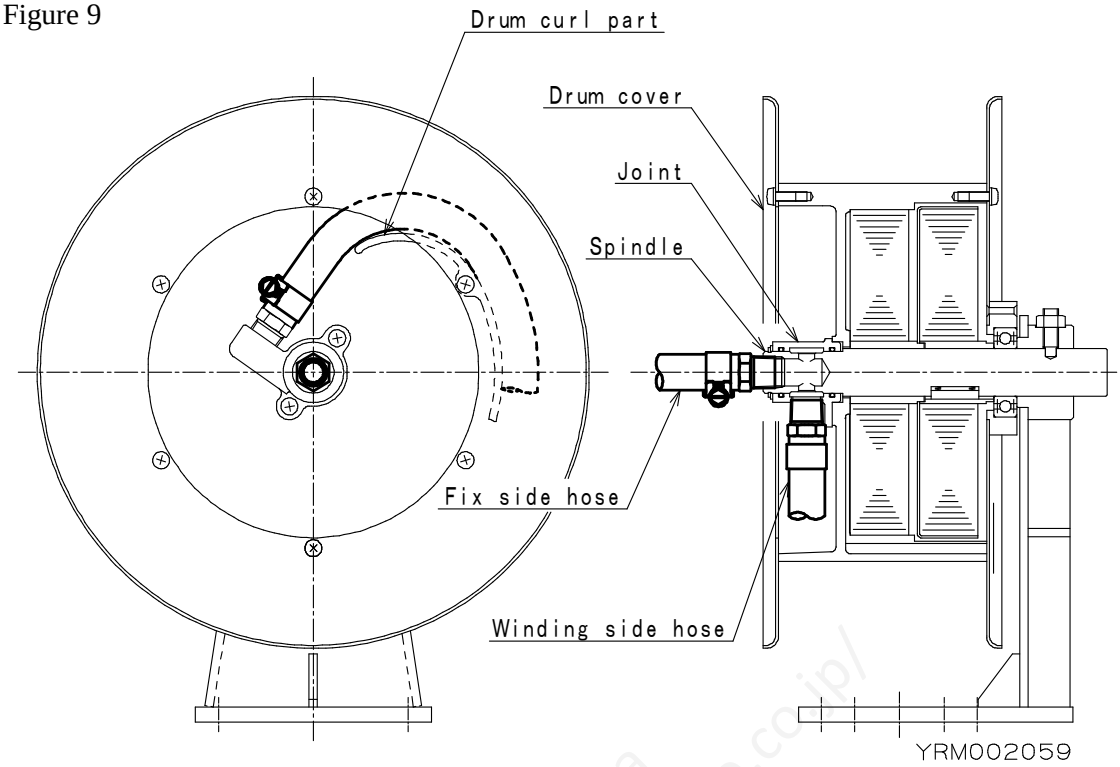

■Winding side hose (Refer to Figure 9)

(1) Pass the hose through the drum part from the drum side.
(2) Connect the hose to joint.
NOTE: For hose without fitting, use and tie the sliding band.
Remove nipple for hose with fitting.
Then use seal tape around the screw part of hose fitting.
(Refer to 10)

Figure 10

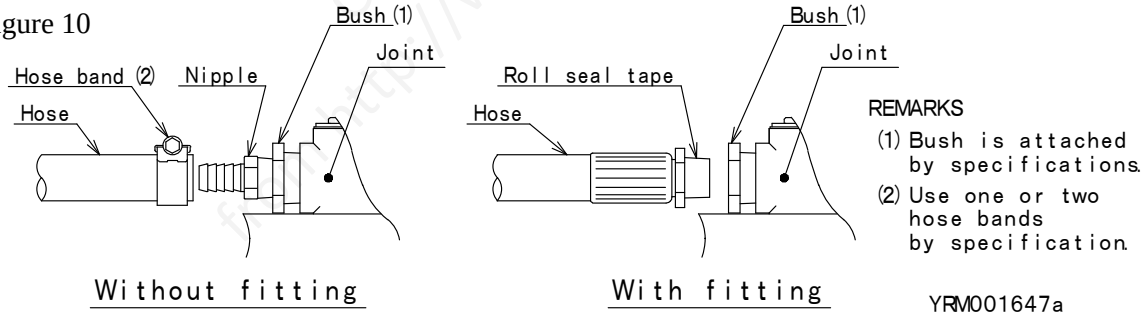

■Fixed side hose

(1) Attach the hose to spindle.
NOTE: For hose without fitting, use and tie the sliding band.
Remove nipple for hose with fitting.
Then use seal tape around the screw part of hose fitting.
(Refer to Figure 10)

6. Spring Tension Adjustment

6-1. Relationship between winding torque and drum turns

Figure 11

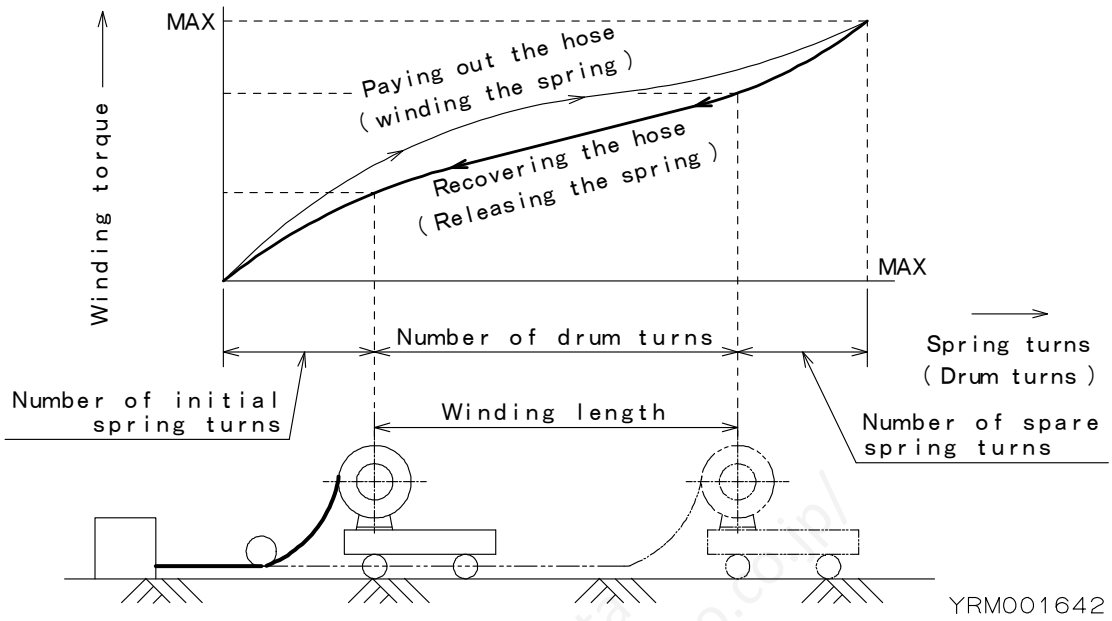

Number of initial spring turns	means the number of spring turns which provides the initial tension required for winding the hose onto the drum.
Number of spare spring turns	means the number of remaining spring turns when the hose is fully paid out. A shortage of spare spring turns shortens the spring life and causes spring breakage.

6-2. Standard value of initial spring turns and calculation for upper limit of initial spring turns.

(1) Check the total number of spring turns using Table 1 (page 6).
(2) Rotate the drum by hand until the hose of the winding length is fully retracted, checking the number of drum turns.
(3) Check the standard value of initial spring turns and the number of spare spring turns using Table 2.

Table 2

Spring combination	Number of sets	Standard value of initial spring turns	Number of spare spring turns
None	1	1 to 3 times	1.5 or more
W	2	2 to 6 times	3 or more

Upper limit of initial spring turns = Total number of spring turns
- (Number of drum turns + Number of spare spring turns)

Example) Model **HR-2A305W** for the case of 20 drum turns
According to Table 1, Total number of spring turns = 39.
According to Table 2, Standard value of initial spring turns = 2 - 6
Number of spare spring turns = 3 or more
Upper limit of initial spring turns = 39 - (20 + 3) = 16
Then the allowable number of initial spring turns = 2 - 16

6-3. Initial tension setting

⚠ WARNING

- **Never let go of the drum during any work.**
  When released, the drum suddenly rotates, possibly causing personal injury.
- **After setting the initial tension, hose connection requires more than 2 people to secure the drum and connect the hose.**

(1) Wind the whole hose around the drum before connecting to the mating equipment.
NOTE: Take care not to twist the hose around the drum.

(2) With the hose still wrapped around the drum, rotate the drum by hand in the payout direction the same number of turns as “standard value of initial spring turns” (Refer to Table 2).
This becomes "initial spring turn".

(3) Without letting the drum rotate, unwind the hose to the connection length plus the extension length and connect the hose to the mating equipment.
Check there are no twists in the hose before connection.

(4) Pull out the hose to the winding length, then let the hose wind around the drum.
Ensure the drum can recover the hose full length.

(5) If the drum stops during recovery, the initial spring tension is insufficient.
Disconnect the hose from the mating equipment and increase the number of initial spring turns in the same manner.
NOTE: Set the initial tension as small as possible and never exceed the upper limit of the initial spring turns.
Over - tensioning could cause a spring breakage.

7. Measure against Uneven Winding

Uneven winding	means the hose is wound on mainly one side of the drum width. The uneven winding will cause the hose to drop from the drum or recovery problems, resulting in damage to the hose.

7-1. Checks before adjustments

(1) Check the reel position is correct.
Refer to Section 4-2. "installation" (page 8).
Adjust the X and Y axes of the reel.

(2) Check there are no twists in the winding side hose.
If the hose is twisted, disconnect the hose from the mating equipment and remove any twists.

※ If uneven winding still exists after the above checks, adjust according to the next section.

7-2. Adjustments

(1) Initial tension modification.
Increase the number of initial spring turns one by one without exceeding the upper limit.
If there is no improvement, set the initial tension back to the first value.

(2) X axis modification.
Tilt the X axis at a small angle by inserting a spacer under the bracket.

Figure 12

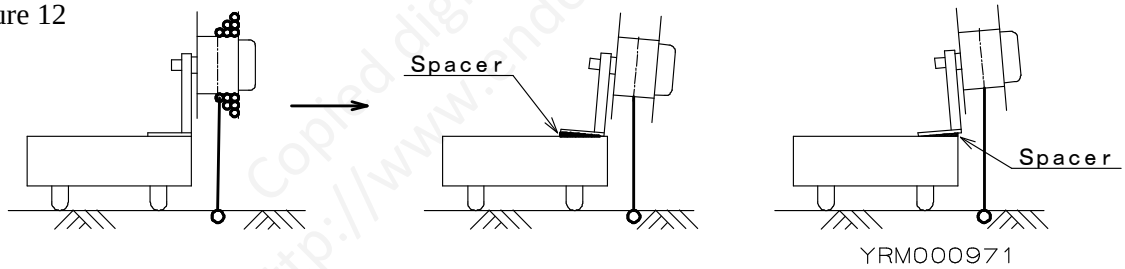

(3) Y axis modification
Tilt the Y axis at a small angle after adjusting the X axis.

Figure 13

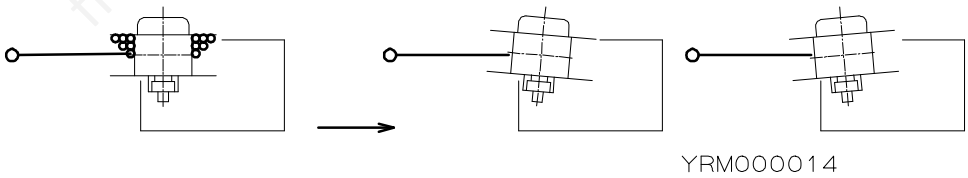

8. Safety Instructions on Use

⚠ WARNING

- **Never approach the moving parts during operation.**
  There is a danger of being caught up.
- **Before supplying different fluid into the hose, take maker's advise.**
  If there is no specification request on the type of fluid application, the product will be for air, water (less than 80°C), lubricating oil (Mineral type), grease (lithium type).
  If you are applying different kinds of fluid from standard fluid type,take maker's advise.
- **Shut off the fluid supply immediately in case of any trouble to avoid the problem escalating.**
- **Never use the reel when damaged or abnormal sound/vibration occurs.**
- **Never alter the reel or its accessories.**
- **Never let go of or unfasten the hose from the fixed points when the hose is pulled out.**
  The hose will rewind suddenly, possibly causing personal injury.

⚠ CAUTION

- **Use within the rated value of maximum working pressure (1.5Mpa {15kgf/cm^2}).**
- **Never pull out the hose past the winding length.**
  Always leave 2-3 dead turns on the drum. (To the sign of red tape)
  Put sign (red tape) on the 2-3 dead turns when installing or replacing the hose.

9. Special Accessories

Figure 14

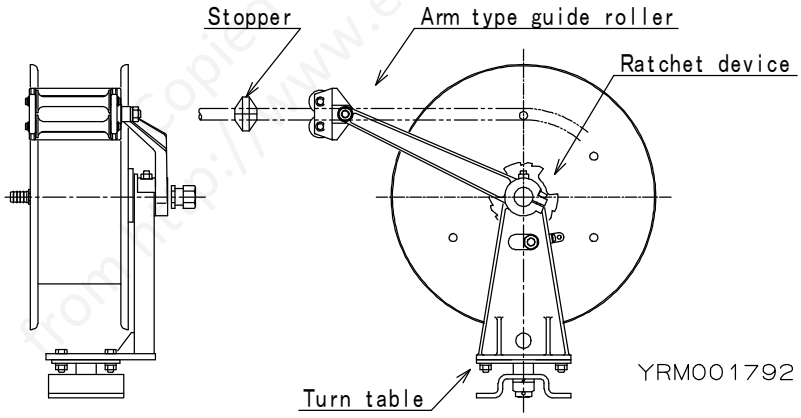

(1) Turn table

This can swivel the reel up to 300° (Refer to Figure 15).
When turned, take care the fixed side hose is not put under excessive force or contacts the reel or surrounding objects.
An arm type guide roller is required together with the turn table.
The fixing position varies depending on the drum width.
Confirm the model name indicated on the name plate, then check the drum code and width. Refer to Section 3-1. "Model and specifications" (page 5).
Fix the turn table to the bracket with the enclosed 4 bolts and nuts referring to Figure 16.

Figure 15

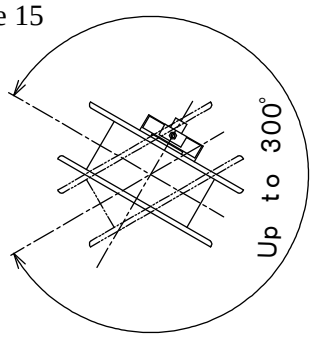

Figure 16

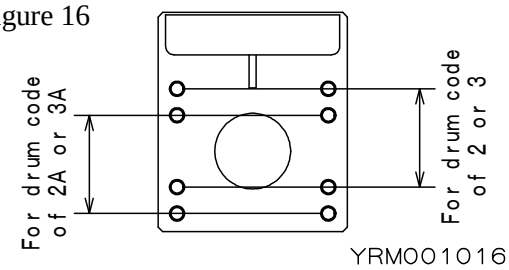

(2) Arm type guide roller

This is required when the reeling direction angle varies during operation.
Attach the arm to the spindle and fix with the hexagon socket head cap screw.

Figure 17

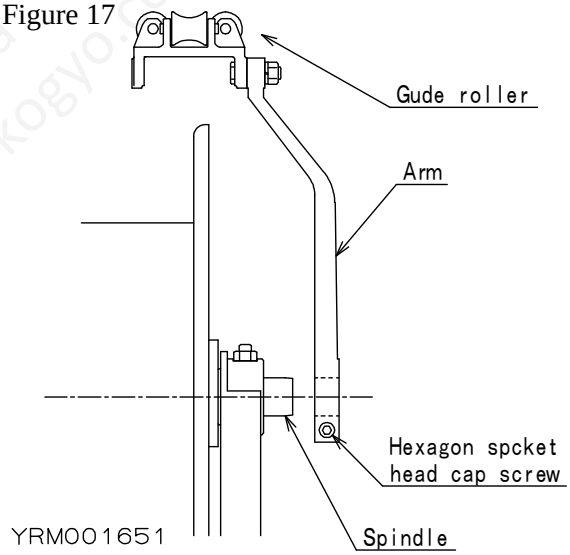

(3) Stopper (Hose the attached)

This will stop the hose at the attached location during a winding operation when used with the arm type guide roller.

(4) Drum stopper

The rotation of the drum can be locked at 90° intervals.
Pull the lever, turn the stopper and insert it in the hole of the drum cover. Pull the lever and set it on the shallow slit for releasing the lock.

(5) Ratchet device (Use for pulling the hose manually)

This is used when the winding operation stops and the hose is still paid out.
To stop the drum, pull out the hose slightly then let it return.
To release the drum, pull out the hose so as to rotate the drum by 1/4 turn.

Figure 18

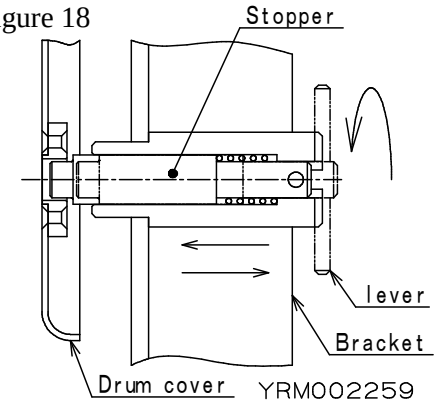

10. Periodic Inspections

⚠ WARNING

- **Periodically inspect the reel and replace any worn or damaged parts. Carefully check the hose has no damage.**
- **If a malfunction is found during a periodic inspection, never reuse the reel but repair immediately.**
- **Allow the hose to fully wind onto the drum to give the minimum winding tension before carrying out inspections.**
- **Fluid leakage hazard.**
  Stop supplying the fluid to the hose reel before carrying out any work.

⚠ CAUTION

- **Always put up an instruction signs ("Equipment being inspected", "Do not open the valve", etc.) before carrying out periodic inspectionor repair.**
- **Always use genuine parts for replacement.**

■Inspect the reel at least every 6 months.
Make the inspection interval shorter when operating frequently or under hostile environments.

10-1. Visual inspections

- Is there any deformation or damage on the reel?
- Are any bolts or screws loose, missing or rusted?
- Are there any twists or damage on the hose?

10-2. Leakage inspection

- Is there any leakage from joint?
  Check the leakage when the reel is stopping and moving.
  The moving inspection for leakage is rotating the joint by pulling the hose reel.
  If the fluid is air, inspect with soap application.
  If the leakage has found, replace O-ring by referring Chapter 12 “O-ring replacement” (page 17).
- Check the leakage at connection parts.
  If the fluid is air, inspect with soap application.
  If the leakage is found at connection, redo the connection and make sure the connections are secured.

10-3. Storage

⚠ CAUTION

- **Test the fluid leakage on the hose and reel after the reel has been stored for a long time.**
  Refer to Section 10-2. "Leakage inspection".

Store the reel in an indoor dry location when not being used for a long time.

11. Troubleshooting

Malfunction	Main causes	Solution
Unable to set the initial tension.	Direction of initial spring turns is incorrect.	Rotate in the hose paying out direction.
	The spring is broken.	Replace with a new spring.
The reel connect retrieve the hose.	The initial tension is insufficient.	Increase the initial spring turns.
	The spring is broken.	Replace with a new spring.
Fluid leakage.	Hose connection error.	Reconnect the hose.
	O-ring is wearing.	Replace wearing O-ring if the wearing O-ring is found by inspection after disassembling the hose reel.

12. O-ring replacement

⚠ WARNING

- **High pressured fluid on hose reel is very dangerous.**
  Shut off the fluid supply and set 0 pressure in the hose.
- **Allow the hose to fully wind onto the drum to give the minimum winding tension before carrying out replacement.**

⚠ CAUTION

- **Always put up an instruction signs ("Equipment being inspected", "Do not open the valve", etc.) before carrying out O-ring replacement.**
- **After finishing O-ring replacement, carry out the fluid leakage test on joint and each connection part.**
  Refer to Section 10-2 "Leakage inspection" (page 16).

Figure 19

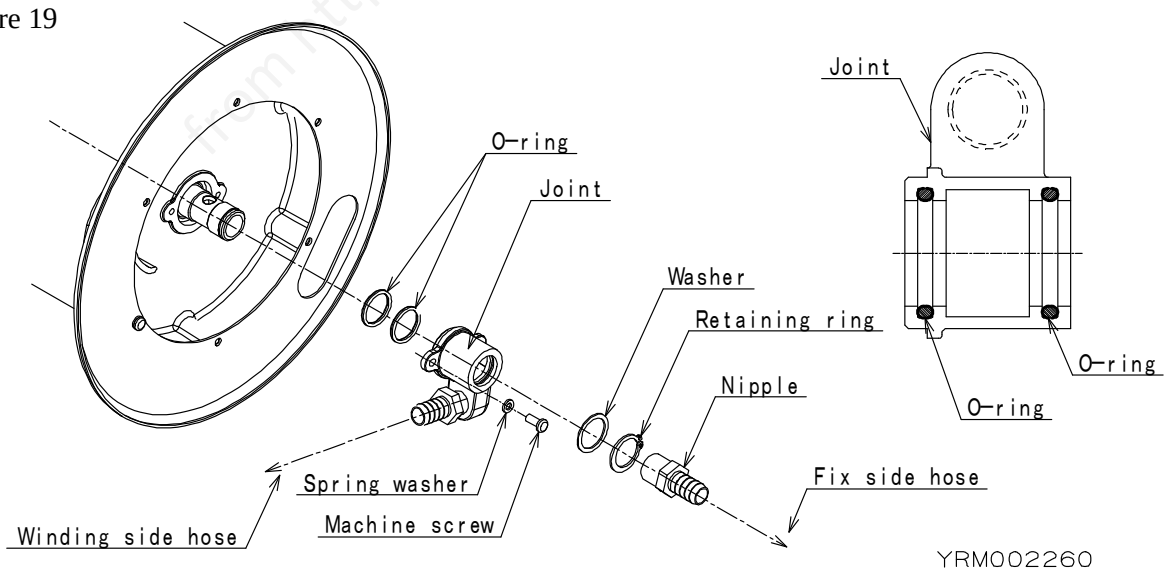

■Refer to Figure 19 (page 17)

(1) Remove fixed side hose from spindle.
If it is impossible to remove the joint from spindle, remove the bushing too.
(The bush referred to here is a reducing bush between the spindle and the nipple.)

(2) Remove winding side hose from joint.

(3) Remove retaining ring and washer.

(4) Remove the machine screws which fix the joint.

(5) Remove the joint from spindle.

(6) Take away two O-rings from joint.

(7) Clean up the spindle and O-ring.
Replace worn, cracked, damaged or deformed parts.

(8) Attach O-ring after lightly spreading the grease (IDEMITSU, DAPHNE EPONEX GREASE SR No.1 or equivalents) into the drain of O-ring.

(9) Also spread the grease inside of the joint (O-ring) and the spindle around part where the joint is connected.

(10) Attach the spindle onto the joint.
Align the mounting holes on the joint with the tapped holes for joint fixing on the drum, and tighten the machine screws there.
NOTE: Never attach the joint by force. O-ring might wear.

(11) Attach the retaining ring and washer to the spindle.

(12) Connect the fixed side and winding side hose.

(13) Carry out leakage inspection.
Refer to Section 10-2 "Leakage inspection" (Page 16).

⚠ CAUTION

- **Never tighten the nipple too much when installing it onto the spindle. This causes deformation of the spindle or winding trouble.**

13. Spring Replacement

⚠ WARNING

- **High pressured fluid on hose reel is very dangerous.**
  Shut off the fluid supply, and set 0 pressure in the hose.
- **If the winding side hose is disconnected from mating equipment, the drum may suddenly rotate.**
  Allow the hose to fully wind onto the drum to give the minimum winding tension, and work with more than 2 people divided into the person who secure the drum and the person who disconnect the hose.
  Allow the disconnected hose to wind around the drum, and slowly turn the drum until the winding tension in the drum is released.
- **Never disassembly until the reel's winding tension is released.**
  The spring will burst out and cause personal injury.
  Even if the spring seems to be broken, never disassemble before ensuring no winding tension remains by rotating the drum by hand.
- **Never disassemble using any other disassembly procedure.**
  Follow the instructions for handling and disposing of the spring.

⚠ CAUTION

- **Always put up an instruction signs ("Equipment being inspected", "Do not open the valve", etc.) before carrying out spring replacement.**

Before disassembly, check the winding direction (forward winding or reverse winding) and the spring structure (A - D) of the reel.
Confirm the model name indicated on the name plate, then refer to Section 3-1. "Models and specifications" (page 5).
Disassembly and reassembly procedures are different depending on the winding direction and spring structure.

13-1. Disassembly of bracket

(Common method for all spring structures)

(1) Shut off the fluid supply by setting 0 pressure hose inside.
(2) Allow the hose to fully wind around the drum to give minimum winding tension, then dismantle the mating equipment side hose connection.
Allow the disconnected hose to wind around the drum, slowly turning the drum until the winding tension in the drum is released.
This work requires more than two people.
(3) Dismantle the fixed side hose, and remove the nipple which is attached to the spindle.
(4) Unwind the hose and remove from the drum, then remove the hose from the installation position.
(5) Place the reel on a work table with the joint side downward.
Never directly push down the spindle onto the table.
Therefore, place materials between joint and table.
Also, for preventing the reel to fall down, prepare and use the support material (Refer to Figure 21).
(6) Loosen the hexagon nut and remove the hexagon socket set screw (Refer to Figure 20).
Pull out the bracket from the spindle and remove the key from the spindle.

Figure 20

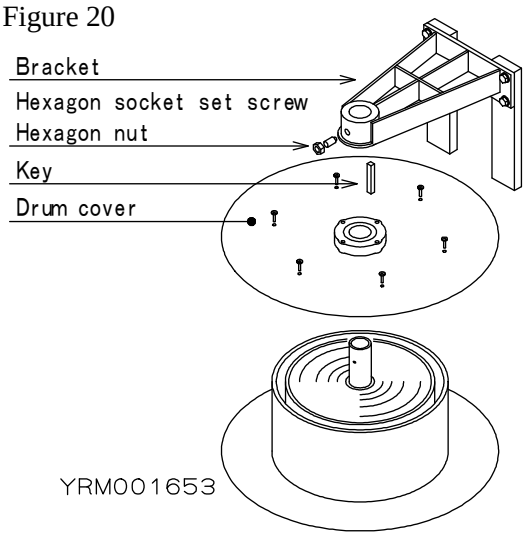

Figure 21

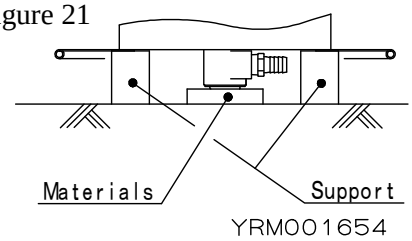

(7) Remove the drum cover from the drum (Refer to Figure 20 on page 19).

⚠ WARNING

- **Move the drum cover upward about 15mm and check the internal spring does not pop out, then remove the drum cover.**

(8) Follow the disassemble and reassembly procedures depending on the spring structure.

13-2. Disassembly and reassembly according to spring structure

⚠ WARNING

- **The spring is dangerous due to its tensional energy.**
  If incorrectly handled, the spring will expand explosively and causing personal injury.
- **Never remove the spring, which is not installed in the case, from the drum without welding the steel plates to the spring.**
  Never use gas welding, only use arc welding.
- **Never remove the spring from the spring case.**
  If it is removed from the spring case, the spring will expand explosively and causing personal injury.
- **Never remove the band from the new spring before replacement.**
- **Hold the center of the new spring, which is bound with the band, by hand to prevent from falling when handling.**
  If the center falls, the spring will expand explosively and causing personal injury.
- **Never turn the spring case upside down.**
  If turned upside down, the spring center will fall and the spring will burst out from the spring case, causing personal injury.

■For spring structure A (1 spring)

(1) Weld steel plates to the spring in order to prevent the spring from expansion.
Use steel plates with enough length to cover the periphery of the spring, and weld along the whole length.
NOTE: Wipe off all grease from the spring surface to avoid grease combustion.

(2) Remove the welded spring from the drum.
NOTE: When removing the spring, the notch key and two notch springs will drop out from the spindle.
Take care not to lose them.

(3) Remove the bush from the spring.

(4) Before reassembly, clean and inspect all the disassembled parts.
Replace worn, cracked, damaged or deformed parts.

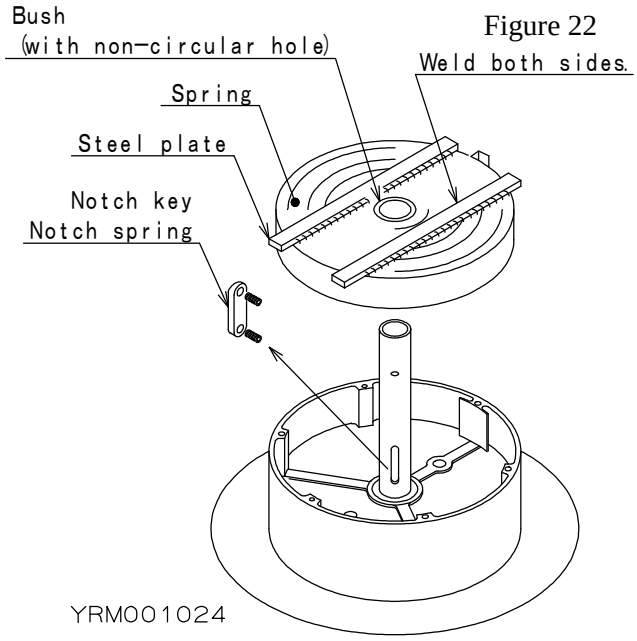

Figure 22

(5) Lightly lubricate the bush attaching portion of the spindle and the inside surface of the bush with grease (IDEMITSU, DAPHNE EPONEX GREASE SR No.1 or equivalents).
Place the notch key and notch springs into the slot of the spindle and attach the bush with the non-circular hole to the spindle.
Take care as the assembling direction of the notch key depends on the winding direction of the reel. Refer to Figure 23.
The machined end of the bush should face upward.

Figure 23

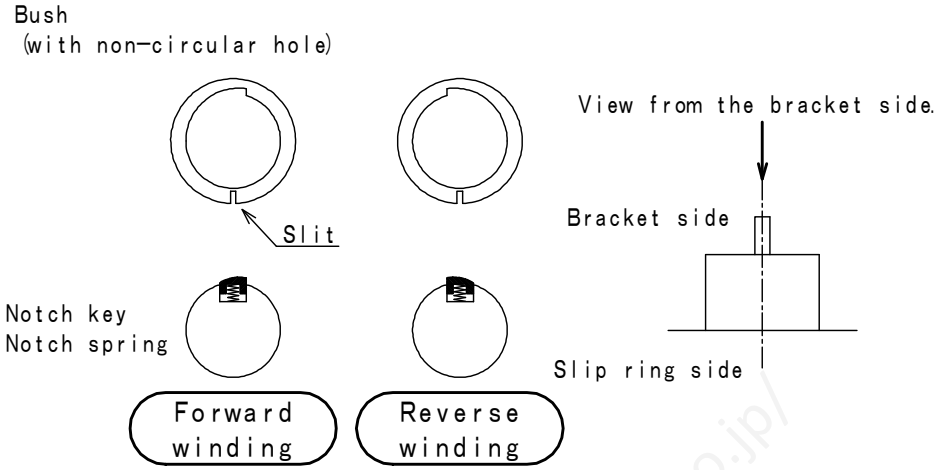

Assembling direction of the bush and notch key depending on the winding direction

YRM000981

(6) Install the spring into the drum.
1) Before installation, check the assembling direction which depends on the winding direction of the reel. Refer to Figure 25 (page 22).
2) Slightly move the band upward in order to make the removal easy.
Refer to Figure 24.

Figure 24

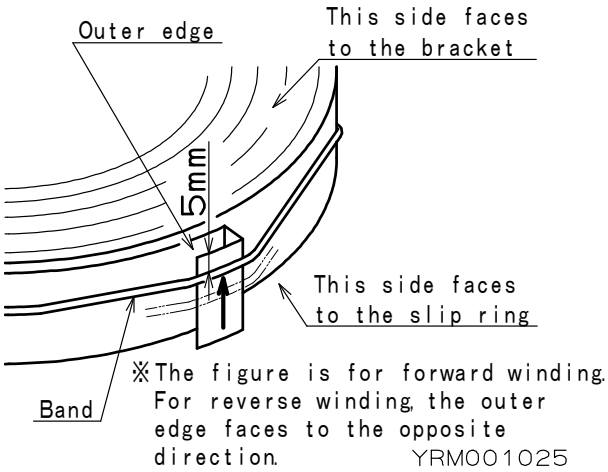

⚠ WARNING

Never move the band too much.
If moved too much, the band will come off and the spring will expandexplosively, causing personal injury.

3) Place the spring into the drum.
Fit the center edge of the spring into the slit of the bush by hammering.
Put a steel plate or the like to protect the spring when hammering.

4) Place the outer edge of the spring on the spring fixing portion of the drum.
Refer to Figure 25.

Figure 25

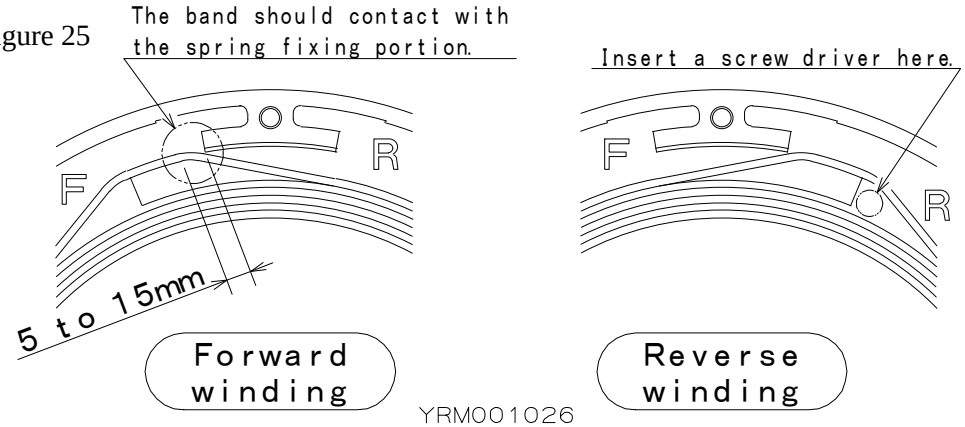

5) Insert a screw driver into the space between the band and the spring as shown in Figure 26, then remove the band.

Figure 26

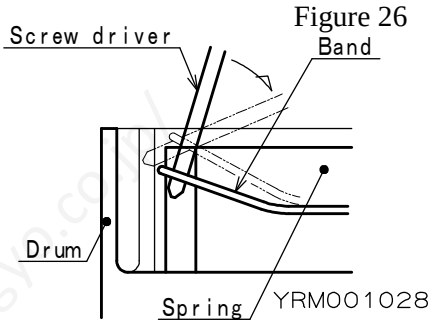

⚠ WARNING

Take care not to catch your finger in the spring since the spring will expand explosively when the band is remove.

6) Lubricate the spring with 22 cm^3 (mL) of grease (KYODO, ONELUBERMP No.2 or equivalents).
Spread grease all over the spring.

(7) Follow the procedure given in Section 13-3. "Common reassembly method" (page 27).

■For spring structure B (1 spring and 1 empty spring case)

(1) Remove the bush and the empty spring case from the drum.

(2) Weld steel plates to the spring in order to prevent the spring from expansion.
Use steel plates with enough length to cover the periphery of the spring, and weld along the whole length.
NOTE: Wipe off all grease from the spring surface to avoid grease combustion.

(3) Remove the welded spring from the drum.
NOTE: When removing the spring, the notch key and two notch springs will drop out from the spindle.
Take care not to lose them.

(4) Remove the bush from the spring.

(5) Before reassembly, clean and inspect all the disassembled parts.
Replace worn, cracked, damaged or deformed parts.

Figure 27

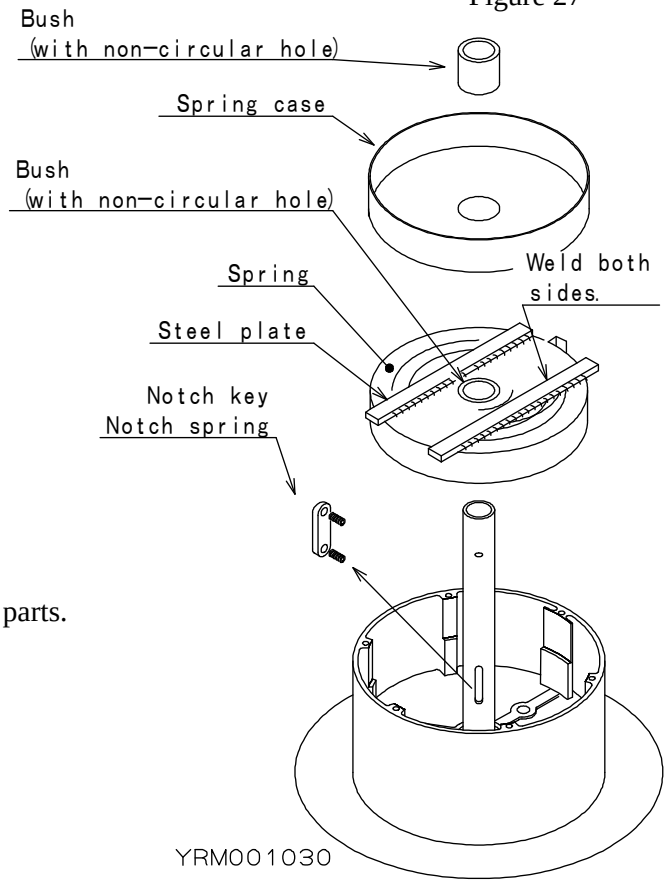

(6) Lightly lubricate the bush attaching portion of the spindle and the inside surface of the bush with grease (IDEMITSU, DAPHNE EPONEX GREASE SR No.1 or equivalents).
Place the notch key and notch springs into the slot of the spindle and attach the bush with the non-circular hole to the spindle.
Take care as the assembling direction of the notch key depends on the winding direction of the reel. Refer to Figure 23 (page 21).
The machined end of the bush should face upward.

(7) Install the spring into the drum.
1) Before installation, check the assembling direction which depends on the winding direction of the reel. Refer to Figure 25 (page 22).
2) Slightly move the band upward in order to make the removal easy.
Refer to Figure 24 (page 21).

⚠ WARNING

Never move the band too much.
If moved too much, the band will come off and the spring will expand explosively, causing personal injury.

3) Place the spring into the drum.
Fit the center edge of the spring into the slit of the bush by hammering.
Put a steel plate or the like to protect the spring when hammering.
4) Place the outer edge of the spring on the spring fixing portion of the drum.
Refer to 25 (page 22).
5) Insert a screw driver into the space between the band and the spring as shown in Figure 26 (page 22), then remove the band.

⚠ WARNING

Take care not to catch your finger in the spring since the spring will expand explosively when the band is removed.

6) Lubricate the spring with 22 cm^3 (mL) of grease (KYODO, ONELUBER MP No.2 or equivalents).
Spread grease all over the spring.

(8) Install the empty spring case in to the drum.
Lightly lubricate the inside surface of the bush with grease (IDEMITSU, DAPHNE EPONEX GREASE SR No.1 or equivalents) and install the bush into the drum.
The machined end of the bush should face upward.

(9) Follow the procedure given in Section 13-3. "Common reassembly method" (page 27).

■For spring structure C (2 or 3 springs, double stroke)

(1) Remove the upper spring case and spring together from the drum.
Grip the spring case with pliers and slowly pull out from the drum by hand.
NOTE: When removing the upper spring case, the notch key and two notch springs will drop out from the spindle.
Take care not to lose them.

(2) Weld steel plates to the spring, which is not installed in the case, in order to prevent the spring from expansion.
Use steel plates with enough length to cover the periphery of the spring, and weld along the whole length.
NOTE: Wipe off all grease from the spring surface to avoid grease combustion.

(3) Remove the welded spring from the drum.
(4) Remove the bush from the spring.
(5) Before reassembly, clean and inspect all the disassembled parts.
Replace worn, cracked, damaged or deformed parts.
(6) Lightly lubricate the bush attaching portion of the spindle and the inside surface of the bush with grease (IDEMITSU, DAPHNE EPONEX GREASE SR No.1 or equivalents).
Attach the bush with the circular hole to the spindle.
The machined end of the bush should face upward.

Figure 28

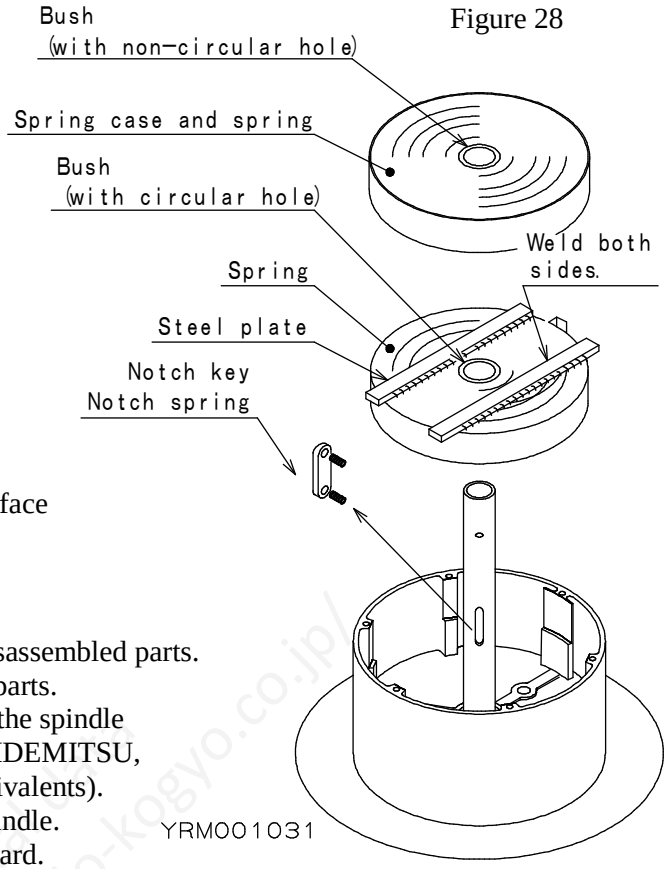

Figure 29

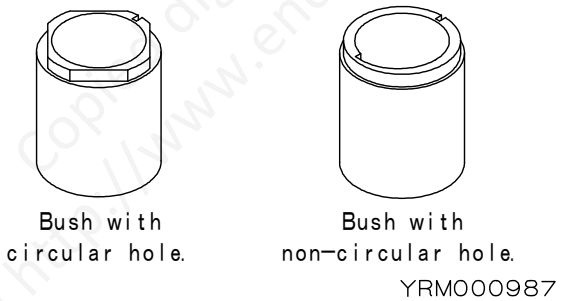

(7) Install the spring without the spring case into the drum.
1) Before installation, check the assembling direction which depends on the winding direction of the reel. Refer to Figure 25 (page 22).
2) Slightly move the band upward in order to make the removal easy.
Refer to Figure 24 (page 21).

⚠ WARNING

Never move the band too much.
If moved too much, the band will come off and the spring will expand explosively, causing personal injury.

3) Place the spring into the drum.
Fit the center edge of the spring into the slit of the bush by hammering.
Put a steel plate or the like to protect the spring when hammering.
4) Place the outer edge of the spring on the spring fixing portion of the drum.
Refer to Figure 25 (page 22).

5) Insert a screw driver into the space between the band and the spring as shown in Figure 26 (page 22), then remove the band.

⚠ WARNING

Take care not to catch your finger in the spring since the spring will expand explosively when the band is removed.

6) Lubricate the spring with 22 cm^3 (mL) of grease (KYODO, ONELUBER MP No.2 or equivalents).
Spread grease all over the spring.

(8) Attach the bush with the non-circular hole to the spring with the spring case.
The machined end of the bush should face upward.

(9) Stand the drum with the spindle being horizontal.
Secure the drum by some means not to allow falling or moving.

(10) Place the notch key and notch springs into the slot of the spindle.
Take care as the assembling direction of the notch key depends on the winding direction of the reel.
Refer to Figure 23 (page 21).

(11) Keep the notch key in the slot using the installed bush.
While pressing the attached notch key in the slot with a finger, grip the spring near the bush by pliers and slowly pull about 30 mm, then release.
The spring will move back for some length which varies depending on the spring type.
Check the notch key does not protrude from the spindle surface.
If protruding, pull the spring near the peripheral portion about 10 mm, then pull the spring near the bush about 10 mm.
Try until the notch key does not protrude from the spindle surface.
Refer to Figure 30.

Figure 30

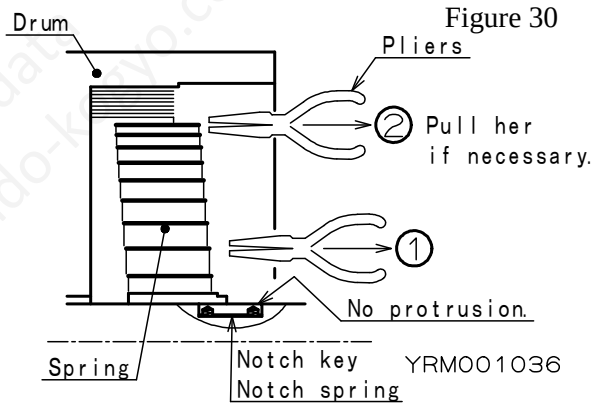

⚠ WARNING

Never pull the spring too much or roughly.
Otherwise, the spring will burst out and cause personal injury.

(12) Lightly lubricate the bush attaching portion of the spindle and the inside surface of the bush with grease (IDEMITSU, DAPHNE EPONEX GREASE SR No.1 or equivalents).
Install the spring with the spring case to the spindle by holding the spring case with one hand and holding the bush with another hand.

⚠ WARNING

Take care not to allow the spring center to fall and burst out.

(13) Lay the drum again on a work table.
Rotate the spring case back and forth until the spring case fits into the bush.

(14) Lubricate the spring with 22 cm^3 (mL) of grease (KYODO, ONELUBER MP No.2 or equivalents).
Spread grease all over the spring.

(15) Follow the procedure given in Section 13-3. "Common reassembly method" (page 27).

■For spring structure D (2 springs, double-torque)

(1) Weld steel plates to the spring in order to prevent the spring from expansion.
Use steel plates with enough length to cover the periphery of the spring, and weld along the whole length.
NOTE: Wipe off all grease from the spring surface to avoid grease combustion.

(2) Remove the welded spring from the drum.
NOTE: When removing the spring, the notch key and two notch springs will drop out from the spindle. Take care not to lose them.

(3) Remove the bush from the spring.

(4) Remove the plate and remove the second spring in the same manner as (1) to (3).

(5) Before reassembly, clean and inspect all the disassembled parts.
Replace worn, cracked, damaged or deformed parts.

(6) Lightly lubricate the bush attaching portion of the spindle and the inside surface of the bush with grease (IDEMITSU, DAPHNE EPONEX GREASE SR No.1 or equivalents).
Place the notch key and notch springs into the slot of the spindle and attach the bush to the spindle.
Take care as the assembling direction of the notch key depends on the winding direction of the reel.
Refer to Figure 23 (page 21).
The machined end of the bush should face upward.

Figure 31

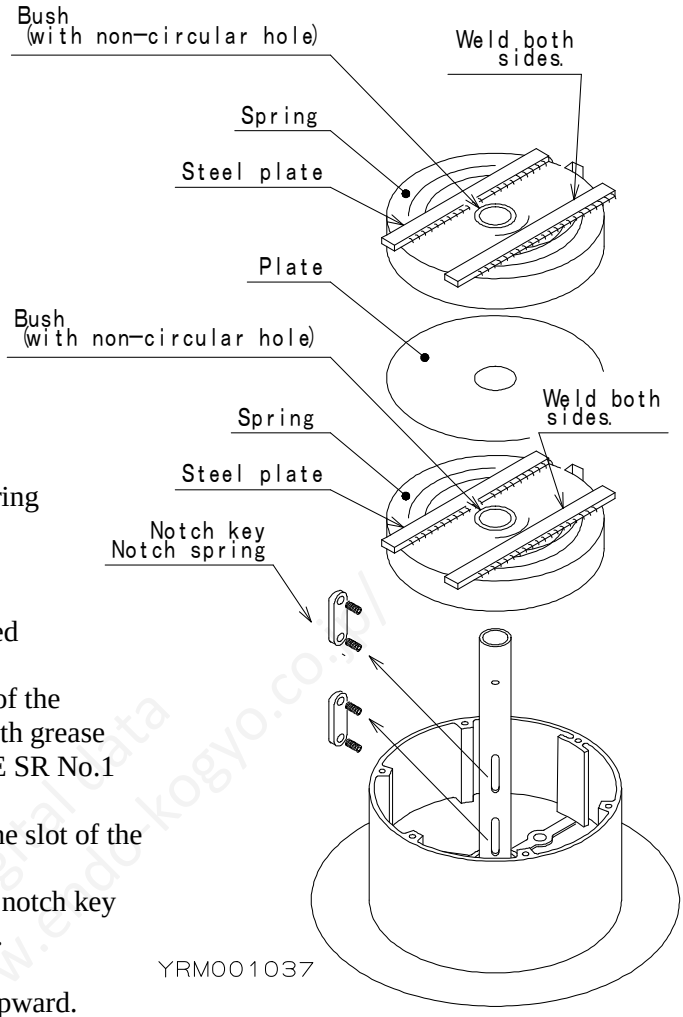

(7) Install the spring into the drum.
1) Before installation, check the assembling direction which depends on the winding direction of the reel. Refer to Figure 25 (page 22).
2) Slightly move the band upward in order to make the removal easy.
Refer to Figure 24 (page 21).

⚠ WARNING

Never move the band too much.
If moved too much, the band will come off and the spring will expand explosively, causing personal injury.

3) Place the spring into the drum.
Fit the center edge of the spring into the slit of the bush by hammering.
Put a steel plate or the like to protect the spring when hammering.
4) Place the outer edge of the spring on the spring fixing portion of the drum.
Refer to Figure 25 (page 22).
5) Insert a screw driver into the space between the band and the spring as shown in Figure 26 (page 22), then remove the band.

⚠ WARNING

Take care not to catch your finger in the spring since the spring will expand explosively when the band is removed.

6) Lubricate the spring with 22 cm^3 (mL) of grease (KYODO, ONELUBER MP No.2 or equivalents).
Spread grease all over the spring.

(8) Install the plate, and install the upper spring into the drum in the same manner as (6) to (7).
(9) Follow the procedure given in Section 13-3. "Common reassembly method".

13-3. Common reassembly method

(1) Check the top spring does not project out from the drum top, then attach the drum cover to the drum.
(2) Attach the bracket to the spindle so that the tapped hole of the bracket faces to the hole of the spindle, then tighten the hexagon socket set screw and fix with the hexagon nut.
(3) Rotate the drum in the payout direction by hand and check the drum has winding torque.
(4) Install the hose.
Refer to Chapter 5. "Hose Connection" (page 9).
(5) Adjust the spring tension.
Refer to Chapter 6. "Spring Tension Adjustment" (page 11).

13-4. Spring disposal

⚠ WARNING

The spring is dangerous due to remaining tension even if it is broken.
Weld steel plates to the spring even if the spring is in the spring case in order to prevent the spring from expansion before disposal.
Never use gas welding, only use arc welding.

- For the spring already welded during disasembly, check the welding is sound and will not break due to rough handling. If not, weld steel plates to the spring again.
- For the spring with the spring case, weld steel plates to the spring in order to prevent the spring from expansion. Use steel plates with enough length to cover the spring case, and weld along the whole length.
  NOTE: Wipe off all grease from the spring surface to avoid grease combustion.

Figure 32

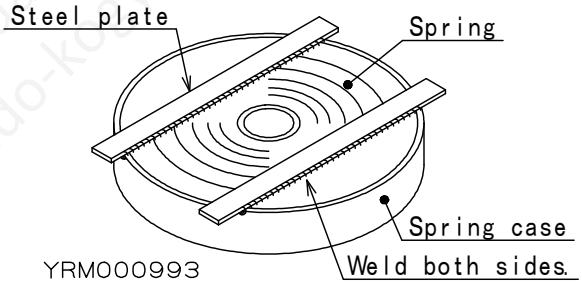

- Give a warning to disposal companies that the spring will expand explosively if the welding is broken due to rough handling.

14. Parts list

■When ordering part:

- State the MODEL, SER. NO. and DATE indicated on the name plate.
- State the part number and description.
- Parts without a part number cannot be supplied individually.
  Please purchase a set or complete unit.

■How to read parts list

No.	List No. or Part No.	Description	Quantity		
			2205	2A210	2A05W
-	LRP003827	Spring assembly	-	-	1
8	-	- Spring	-	-	1
9	-	- Spring case	-	-	1

The mark indicates the range of the set or the complete unit.

□HR－2205、2305, 2A305W

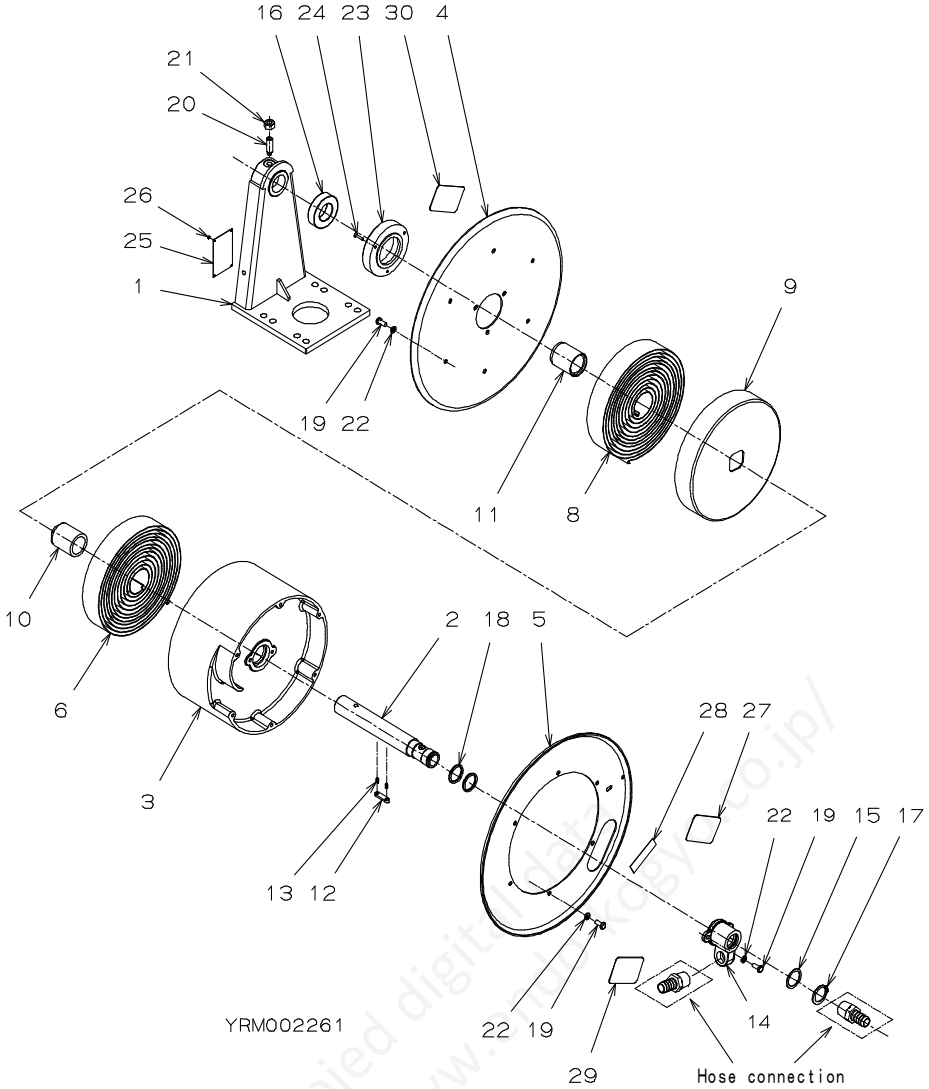

REF No.	Part number	Descriptio	Quantity		
			2205	2305	2A305W
1	LRP001137	Bracket	1	—	—
1	LRP001139	Bracket	—	1	1
2	P1R300291	Spindle	1	1	—
2	P1R300292	Spindle	—	—	1
3	P1R300556a	Drum	1	1	—
3	P1R300558a	Drum	—	—	1
—	LRP003811	Drum cover assembly	1	—	—
—	LRP003821	Drum cover assembly	—	1	1
—	LRP002006	-Drum cover set	1	—	—
—	LRP002007	-Drum cover set	—	1	1
4	—	--Drum cover	1	—	—
4	—	--Drum cover	—	1	1
23	—	--Bearing case	1	1	1
24	KA46300318	--Rivet	3	3	3
16	KA60103054	-Ball bearing	1	1	1
5	P1R300362a	Drum cover	1	—	—
5	P1R300359a	Drum cover	—	1	1

REF No.	Part number	Descriptio	Quantity		
			2205	2305	2A305W
6	P1R300334c	Spring	1	1	1
—	LRP003827	Spring assembly	—	—	1
8	—	-Spring	—	—	1
9	—	-Spring case	—	—	1
10	P1R300461a	Bush	1	1	1
11	P1R300475	Bush	—	—	1
—	LRP003836	Notch key assembly	1	1	1
12	—	Notch key	1	1	1
13	P1R400112	Notch spring	2	2	2
—	LRP003869	Joint assembly	1	1	1
14	—	-Joint	1	1	1
18	KA50100220	O-ring	2	2	2
15	P1R400265	Washer	1	1	1
17	KA40110022	Retaing plate	1	1	1
19	KA10130512	Machine screw	14	14	14
20	KA16330825	Hex. Socket set screw	1	1	1
21	KA20130800	Hex. Nut	1	1	1
22	P1R404503	Spring washer	14	14	14
25	P1R301512	Name plate	1	1	1
26	KA14549803	Drive screw	4	4	4
27	P1R305037	Label	1	1	1
28	P1R401833	Label	1	1	1
29	P1R305035	Warning label	1	1	1
30	P1R304994	Warning label	1	1	1

Parts without a part number cannot be supplied individually.

□HR－2205－R～2A305W－R (Reverse winding type reel)

REF No.	Part number	Descriptio	Quantity		
			2205	2305	2A305W
3	P1R300557a	Drum	1	1	—
3	P1R300559a	Drum	—	—	1
5	P1R300363a	Drum cover	1	—	—
5	P1R300360a	Drum cover	—	1	1
6	P1R300334c	Spring	1	1	1
—	LRP003960	Spring assembly	—	—	1
8	—	-Spring	—	—	1
9	—	-Spring case	—	—	1
10	P1R300462a	Bush	1	1	1
—	LRP003969	Joint assembly	1	1	1
14	—	-Joint	1	1	1
18	KA50100220	O-ring	2	2	2
28	P1R401834	Label	1	1	1

Parts without a part number cannot be supplied individually.

□HR－3416～3A516W

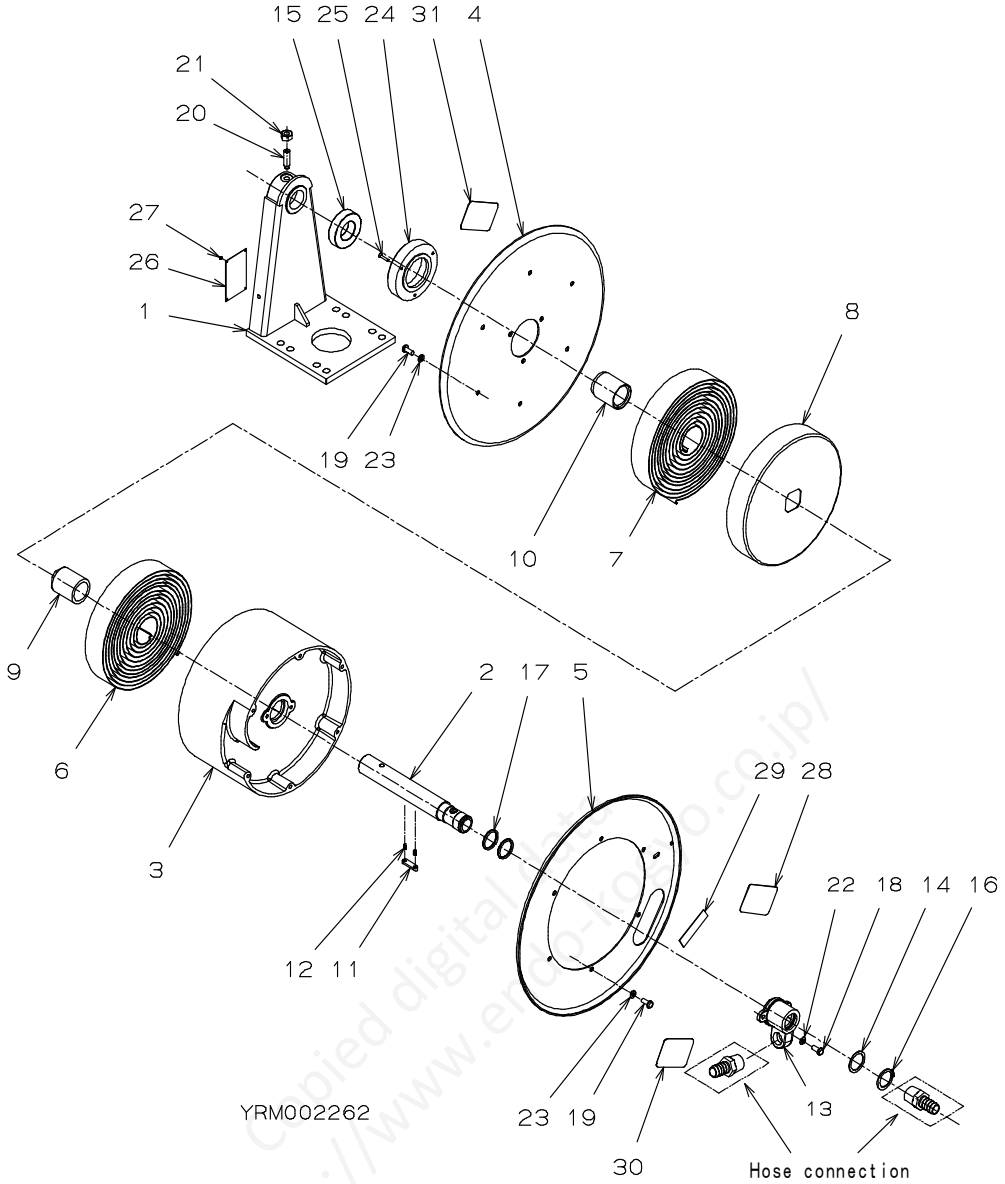

REF No	Part number	Description	Quantity			
			3416	3A416W	3A409W	3A516W
1	LRP001147	Bracket	1	1	—	—
1	LRP001141	Bracket	—	—	1	—
1	LRP001149	Bracket	—	—	—	1
2	P1R300295	Spindle	1	—	—	—
2	P1R300297	Spindle	—	1	—	1
2	P1R300298	Spindle	—	—	1	—
3	P1R300562a	Drum	1	—	—	—
3	P1R300564a	Drum	—	1	1	1
—	LRP003814	Drum cover assembly	1	1	—	—
—	LRP003815	Drum cover assembly	—	—	1	—
—	LRP003822	Drum cover assembly	—	—	—	1
—	LRP002011	-Drum cover set	1	1	—	—
—	LRP002009	-Drum cover set	—	—	1	—
—	LRP002023	-Drum cover set	—	—	—	1
4	—	--Drum cover	1	1	1	—
4	—	--Drum cover	—	—	—	1
24	—	--Ball bearing	1	1	—	1
24	—	--Ball bearing	—	—	1	—
25	KA46300318	--Rivet	3	3	3	3
15	KA60103064	-Ball bearing	1	1	—	1
15	KA60103054	-Ball bearing	—	—	1	—

REF No	Part number	Description	Quantity			
			3416	3A416W	3A409W	3A516W
5	P1R300353	Drum cover	1	1	1	—
5	P1R300551	Drum cover	—	—	—	1
6	P1R300338c	Spring	1	1	—	1
6	P1R300336d	Spring	—	—	1	—
—	LRP003828	Spring assembly	—	1	—	1
—	LRP003829	Spring assembly	—	—	1	—
7	—	-Spring	—	1	—	1
7	—	-Spring	—	—	1	—
8	—	-Spring case	—	1	—	1
8	—	-Spring case	—	—	1	—
9	P1R300463a	Bush	1	1	—	1
9	P1R300461a	Bush	—	—	1	—
10	P1R300476	Bush	—	1	—	1
10	P1R300475	Bush	—	—	1	—
—	LRP003836	Notch key assembly	1	1	1	1
11	—	Notch key	1	1	1	1
12	P1R400112	Notch spring	2	2	2	2
—	LRP003870	Joint assembly	1	1	1	1
13	—	-Joint	1	1	1	1
17	KA50100280	O-ring	2	2	2	2
14	P1R400266	Washer	1	1	1	1
16	KA40110028	Retaining ring	1	1	1	1
18	KA10130512	Machine screw	2	2	2	2
19	KA10130612	Machine screw	12	12	12	12
20	KA16330825	Hex. Socket Set screw	1	1	1	1
21	KA20130800	Hec. Nut	1	1	1	1
22	P1R404503	Spring washer	2	2	2	2
23	P1R404504	Spring washer	12	12	12	12
26	P1R301512	Name plate	1	1	1	1
27	KA14549803	Drive screw	4	4	4	4
28	P1R305037	Label	1	1	1	1
29	P1R401833	Label	1	1	1	1
30	P1R305035	Warning label	1	1	1	1
31	P1R304994	Warning label	1	1	1	1

Parts without a part number cannot be supplied individually.

□HR－3416－R～3A516W－R (Reverse winding type reel)

REF No	Part number	Description	Quantity			
			3416	3A416W	3A409W	3A516W
3	P1R300563a	Drum	1	—	—	—
3	P1R300565a	Drum	—	1	1	1
5	P1R300354a	Drum cover	1	1	1	—
6	P1R300338c	Spring	1	1	—	1
6	P1R300336d	Spring	—	—	1	—
—	LRP003961	Spring assembly	1	—	—	—
—	LRP003962	Spring assembly	—	1	1	1
7	—	-Spring	—	1	—	1
7	—	-Spring	—	—	1	—
8	—	-Spring case	—	1	—	1
8	—	-Spring case	—	—	1	—
9	P1R300464a	Bush	1	1	—	1
9	P1R300462a	Bush	—	—	1	—
—	LRP003970	Joint assembly	1	1	1	1
13	—	-joint	1	1	1	1
17	KA50100280	O-ring	2	2	2	2
28	P1R401834	Label	1	1	1	1

Parts without a part number cannot be supplied individually.

□Accessories

Part number	Descriptio	Applicable model	Applicable hose size (inc)
LRP003438	Hose connection	HR－2205～2A305W	1／4
LRP003439	Hose connection		3／8
LRP003440	Hose connection		1／2
LRP003441	Hose connection	HR－3416～3A516W	3／8
LRP003442	Hose connection		1／2
LRP003443	Hose connection		5／8

ENDO KOGYO CO., LTD.

Head Office: 3-14-7, Akiba-cho, Tsubame, Niigata, Japan
Tel. 0256-62-5133 Fax. 0256-62-5772

Tokyo Office: JBSL Kanda Bldg., 2F, 12-2, Kanda Higashimatushita-cho,
Chiyoda-ku, Tokyo Japan
Tel. 03-5295-3711 Fax. 03-5295-3717

Osaka Office: Daito Bldg., 3F, 3-14, Saiwai-cho 2-chome,
Naniwa-ku, Osaka, Japan
Tel. 06-6568-1571 Fax. 06-6568-1573

Nagoya Office: Park IM Bldg., 3F, 1-7-14, Osu,
Naka-ku, Nagoya, Aichi, Japan
Tel. 052-253-6231 Fax. 052-253-6240

Kyusyu Office: Bunki Bldg., 3F, 11-15, Hakataekihigashi 3-chome,
Hakata-ku, Fukuoka, Japan
Tel. 092-412-5281 Fax. 092-412-5280

URL http://www.endo-kogyo.co.jp